SP200B/N

- Investment Castings For Body And Cap
- Internal Entry Blow-Out Proof Stem
- Pressure Rating: 3000PSI
- Threaded Ends: ANSI B2.1,BS 21,DIN 259/2999
- Material: 316
- Pressure Test : API 598

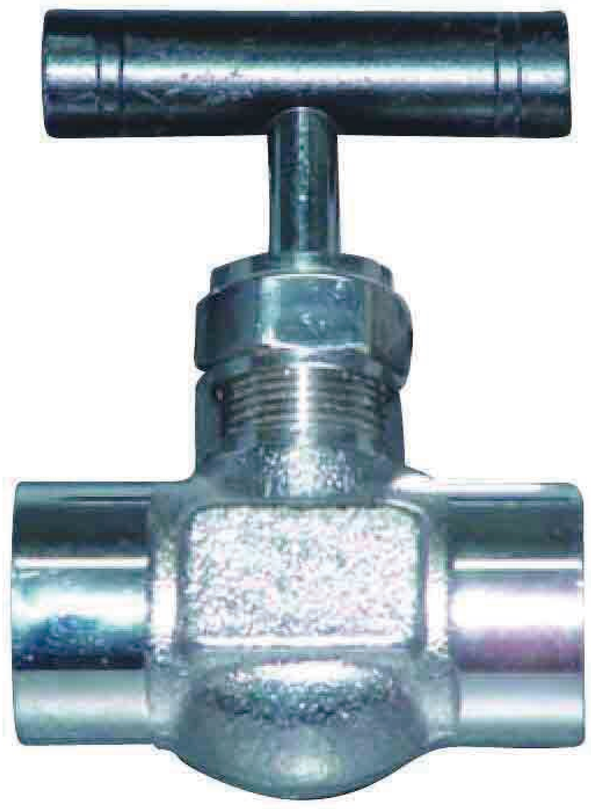

MATERIAL LIST

NO.	DESCRIPTION	MATERIAL
1	BODY	FORGED SS316
2	GLAND NUT	SS316
3	SPINDLE	SS316
4	HANDLE	SS316
5	GLAND	SS316
6	WASHER	SS316
7	GLAND SEAL	TEFLON-PTFE
#8	CHECK NUT	SS316-OPTIONA

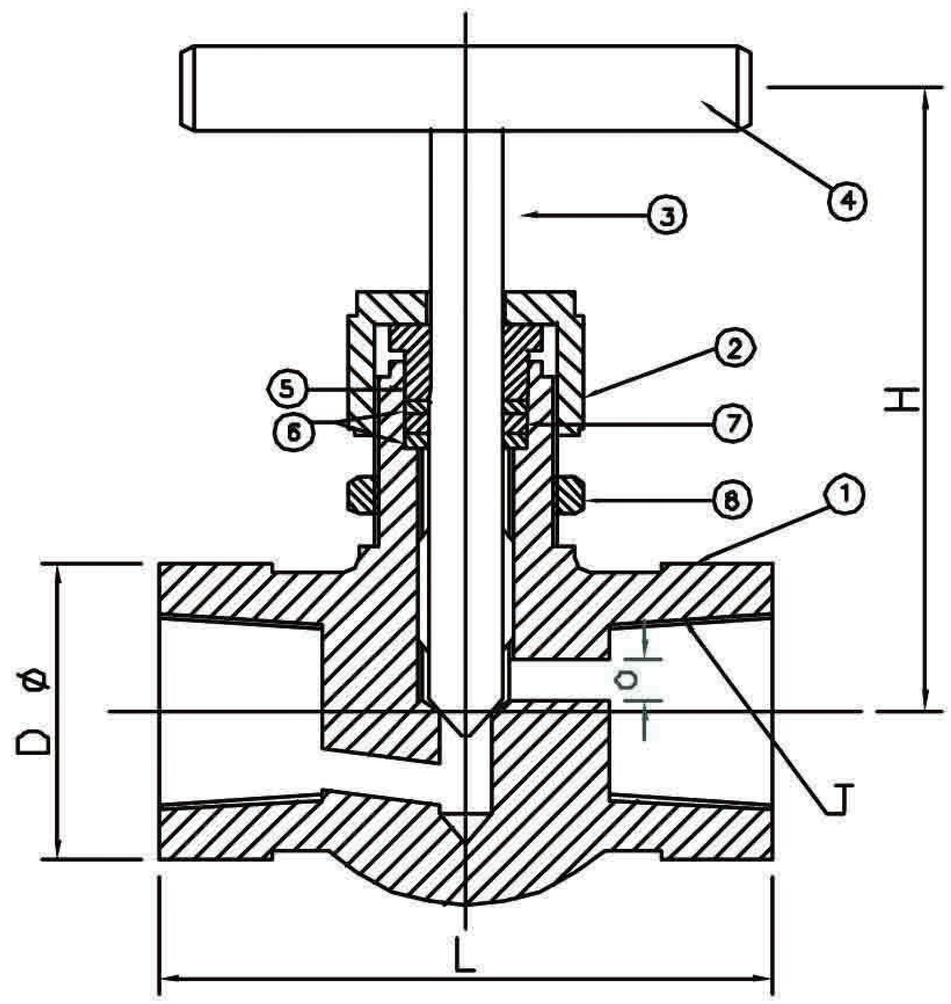

DIMENSION TABLE

SIZE	T-THREAD	L	DΦ	H	O
1/4"	1/4"BSP/NPT	50	20	55	4
3/8"	3/8"BSP/NPT	50	25	59	4
1/2"	1/2"BSP/NPT	64	32	70	5
3/4"	3/4"BSP/NPT	64	36	87	8
1"	1"BSP/NPT	84	43	90	8